© – TE Connectivity. All Rights Reserved.

REVISIONS

P	LTR	DESCRIPTION	DATE	DWN	APVD
	C	REVISED (ECR-22-145653)	18JUL2022	LP	HCC

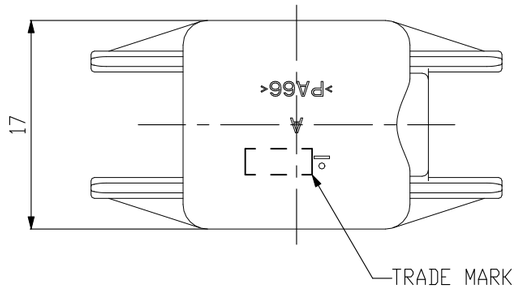

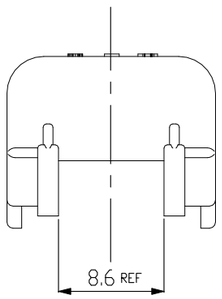

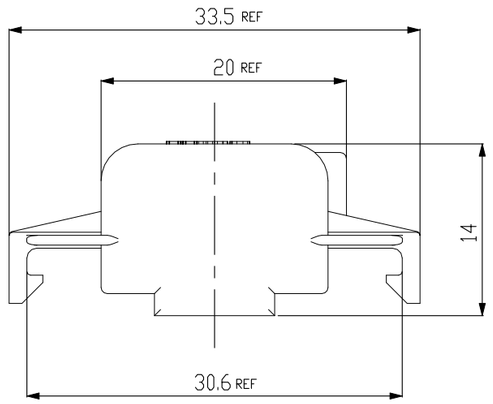

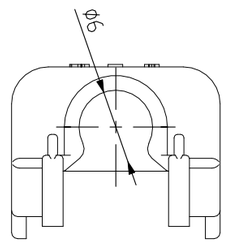

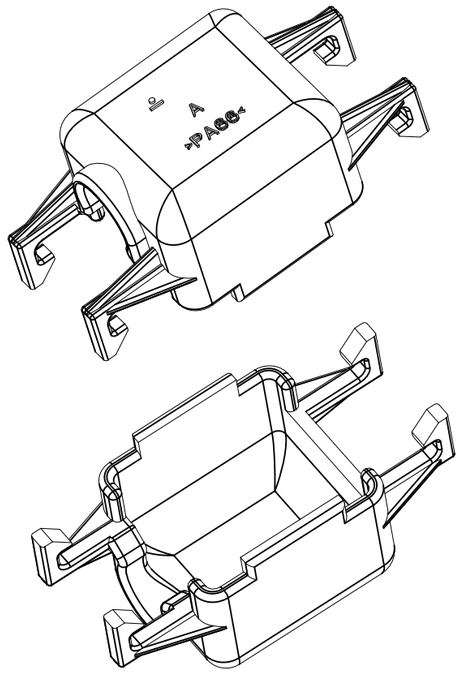

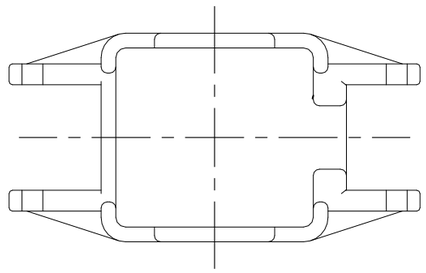

NOTES

1. GENERAL TOLERANCE:±0.3
2. APPLICABLE CONNECTOR:X-967616-X
3. APPLICATION TEST SPEC:MS 210-12(EXCEPT 4.4)

COLOR	MATERIAL	P/N
BLACK	PA66	0-1897096-2

THIS DRAWING IS A CONTROLLED DOCUMENT.

DIMENSIONS: mm

TOLERANCES UNLESS OTHERWISE SPECIFIED:
0 PLC ± –
1 PLC ± –
2 PLC ± –
3 PLC ± –
4 PLC ± –
ANGLES ±

MATERIAL: SEE TABLE

FINISH: –

DWN: SJ CHOI –
CHK: JW JUNG –
APVD: HG CHO –
PRODUCT SPEC: –
APPLICATION SPEC: –
WEIGHT: –

TE Connectivity

NAME: WIRE COVER FOR MQS 6P SLD CONN'R
–
–

SIZE	CAGE CODE	DRAWING NO	RESTRICTED TO
A3	00779	C-1897096	–

CUSTOMER DRAWING

SCALE	SHEET	REV
2:1	1 OF 1	C

1470-19 (1/15)